ASI TECHNICAL GUIDELINE TO SHOW TERMINAL BLOCK 1 WIRING SCHEMATIC

65-0242 | Rev A1 | 07/17/23 | Page 1 of 6

PURPOSE

This technical guideline shows the terminal block 1 wiring schematic for dual-voltage conversion in ASI delivery system dual-voltage models manufactured prior to November 2011. A dual-voltage system is capable of operation from either a 120 V/60 Hz or a 230 V/50 Hz Power Source. However, the system controls must be properly selected for the correct voltage and frequency input for proper operation and to prevent damage to electrical components.

TOOLS REQUIRED

- Small flat screwdriver

IMPORTANT!
Before commencing on the following instructions, please read and follow all applicable warnings/cautions listed at the end of this technical guideline.

INSTRUCTIONS

1 Unplug the delivery unit from the power source. Remove the work top from the top of the unit by firmly, lifting up from one edge to release the high strength Velcro. Open the top metal cover by removing the screws.

2 Locate the terminal block in the rear left of the unit. The terminal block is equipped with jumpers to allow the voltage input to be changed. Use a small flat screwdriver to assist in prying up the jumpers as shown. (Fig. 1)

i ***The figure does not show optional block.***

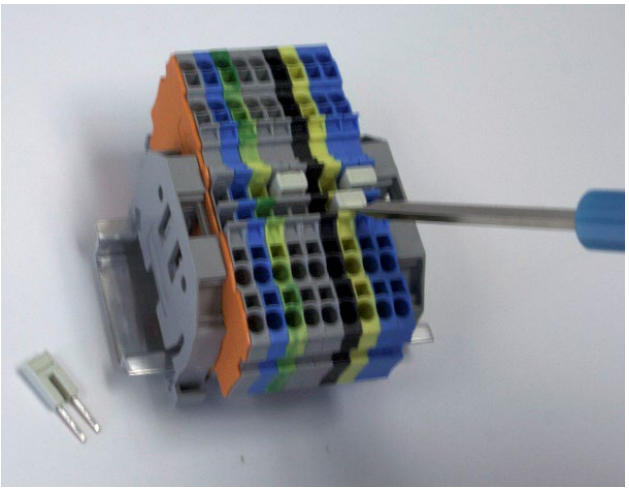

Fig. 1

For 120 Volts/60Hz

Place one jumper to fill the yellow and blue sections. Then place the other jumper to fill the black and gray sections. (Fig. 2)

The figure does not show optional block.

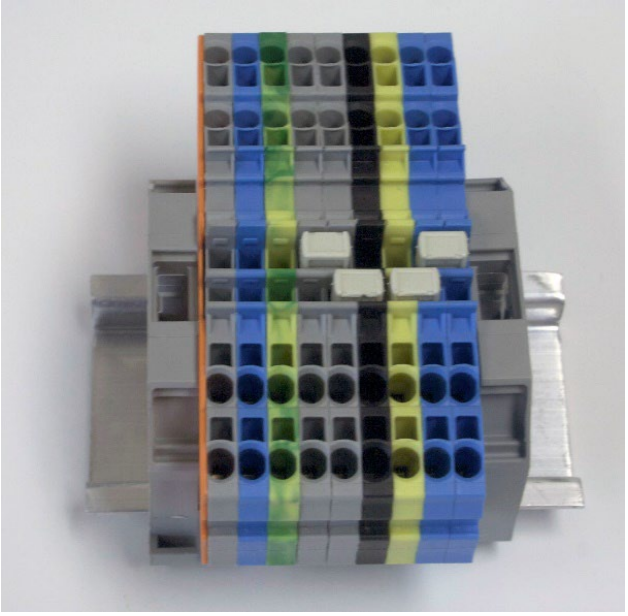

Fig. 2

For 230 Volts/50Hz

Place both jumpers to fill the yellow and black sections stacked with one in front of the other. (Fig. 3)

The figure does not show optional block.

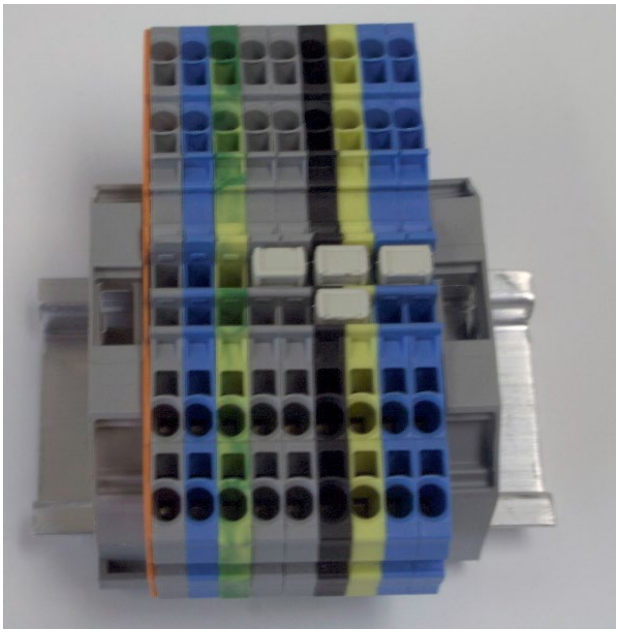

Fig. 3

3 If the unit is equipped with a non-auto-ranging power supply for the Kavo brand electric motor, it will be necessary to switch it to the correct voltage as well.

Locate the voltage selector switch located on the bottom of the transformer. Use a small flat screwdriver to select the desired voltage. (Fig. 4)

Replace the cover and worktop on the unit.

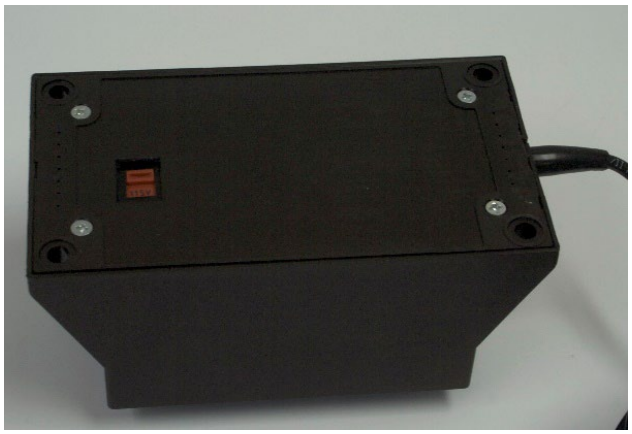

Fig. 4

4 Locate the power cord inlet plate on the back of the unit. Remove the plate by removing the two screws. Flip both voltage selectors on the back of the unit to the desired voltage. Replace the power inlet plate. (Fig. 5)

Fig. 5

5 Replace the power cord plug with the correct type if necessary. The unit has been supplied with both a 120 Volt NEMA type U.S. plug and Schuko 230 Volt European type Plug.

Wiring Diagram 120V ~ 60Hz

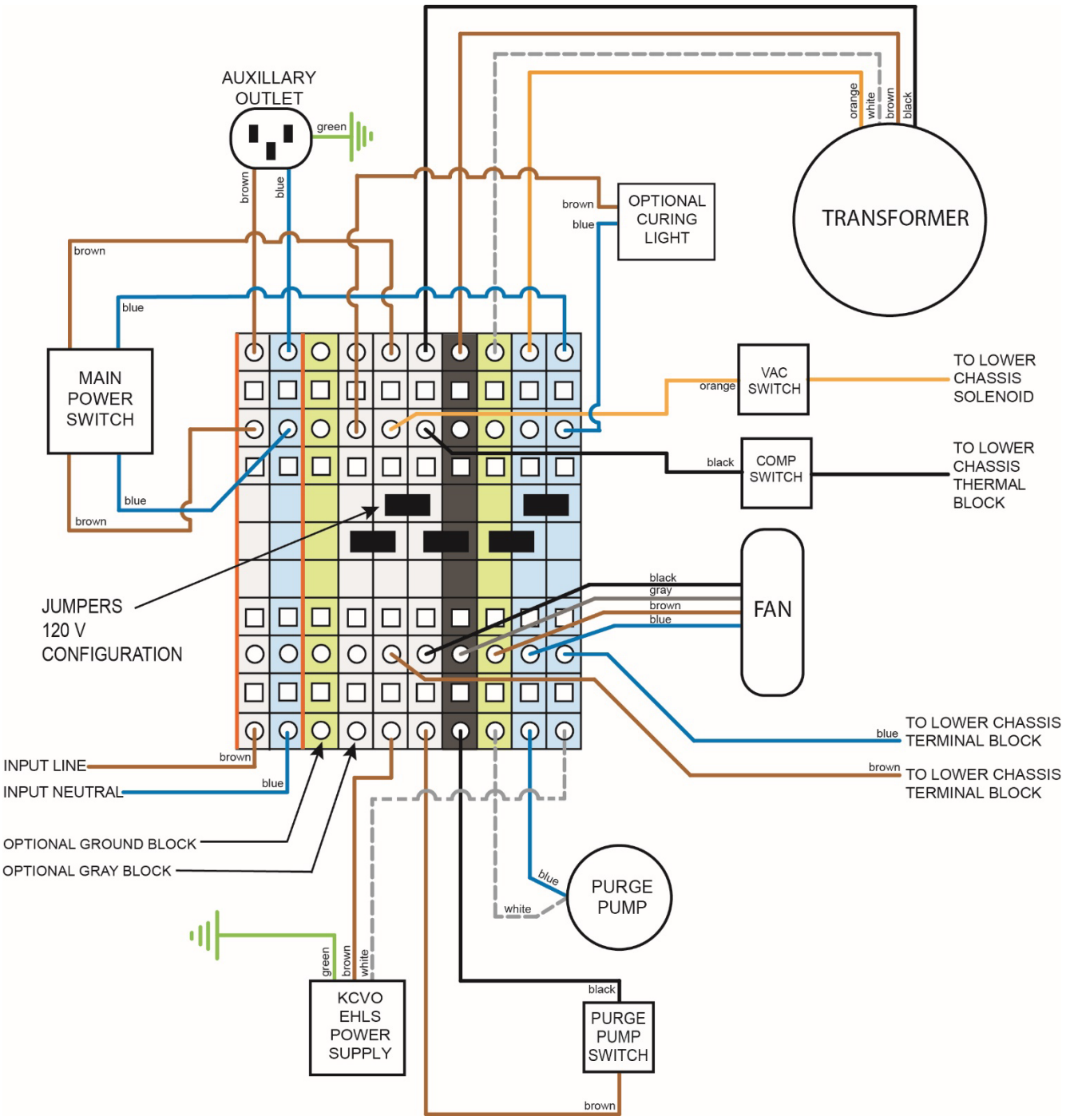

TERMINAL BLOCK 1 WIRING SCHEMATIC FOR DV MODELS

ASI Technical Guideline to Show Terminal Block 1 Wiring Schematic

Wiring Diagram 230V ~ 50Hz

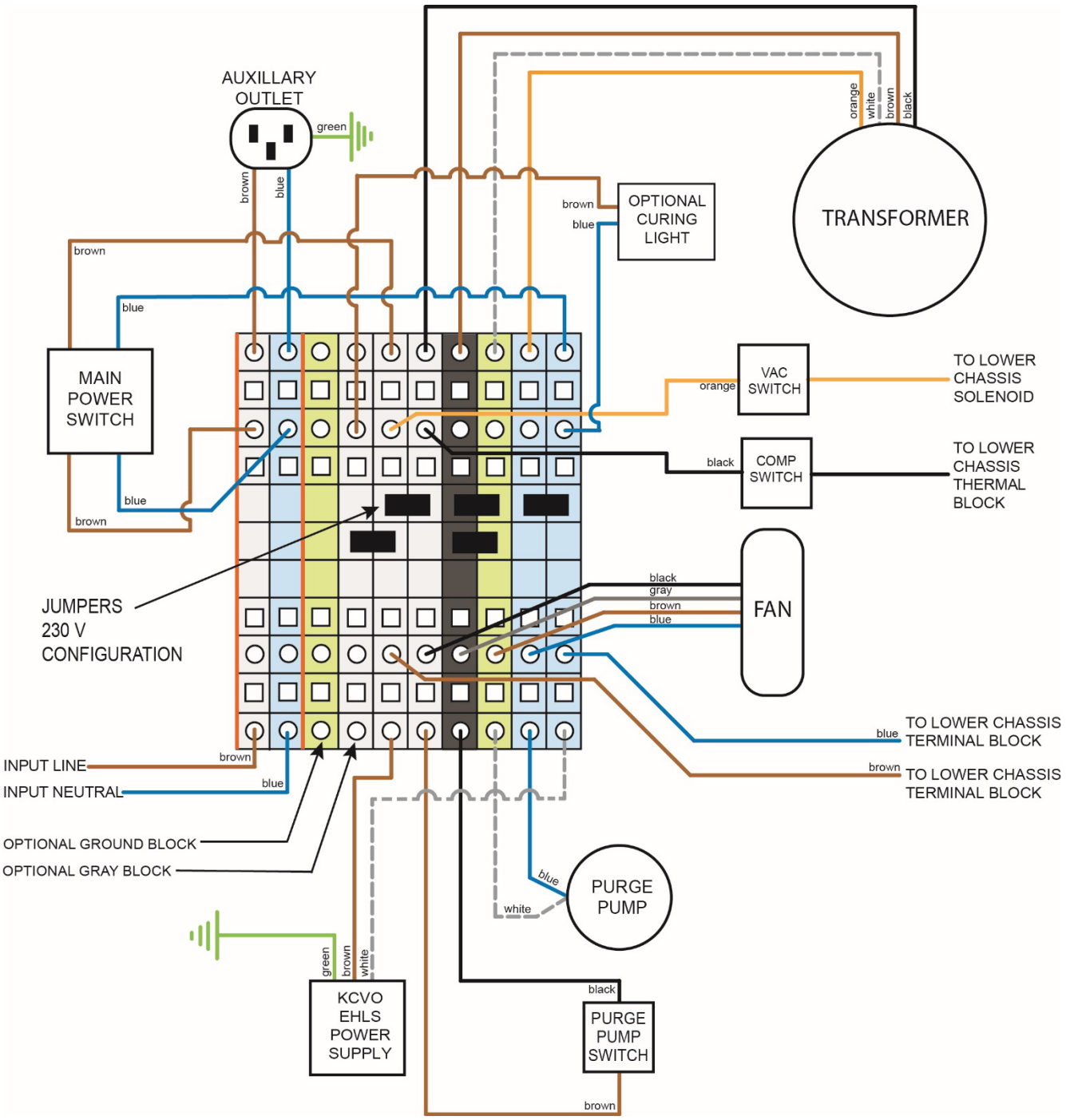

WARNINGS/CAUTIONS

In addition to observing the normal precautions associated with standard dental practices and procedures, the following additional precautions should be strictly noted and observed during the set-up, operation, and maintenance of this system.

⚠ WARNING	⚠ AVERTISSEMENT
QUALIFIED PERSONNEL ONLY The product should only be operated by qualified personnel only. The operator bears responsibility for the correct settings and proper use of the system. ASI Dental (ASI) cannot be held liable for any malfunction of this product, or performance failure and/or its designed or desired utility, nor can ASI be held liable for injuries to persons or animals, in any case when the device is misused or not operated, applied or maintained in strict accordance with user/owner instructions set out in the operation manual. In the event of any doubt or question, the user is to contact ASI for clarification or assistance. Improperly maintained or operated systems or instruments may void the associated warranties.	**PERSONNEL QUALIFIÉ UNIQUEMENT** Le produit ne doit être utilisé que par du personnel qualifié. L'exploitant est responsable des réglages corrects et de l'utilisation correcte du système. ASI Dental (ASI) ne peut être tenu responsable de tout dysfonctionnement de ce produit, ou d'une défaillance de performance et/ou de son utilité conçue ou souhaitée, et ASI ne peut être tenu responsable des blessures aux personnes ou aux animaux, en tout cas lorsque l'appareil est mal utilisé ou pas utilisé, appliqué ou entretenu en stricte conformité avec les instructions de l'utilisateur/propriétaire énoncées dans le manuel d'utilisation. En cas de doute ou de question, l'utilisateur doit contacter ASI pour obtenir des éclaircissements ou de l'aide. Des systèmes ou instruments mal entretenus ou mal exploités peuvent annuler les garanties associées.

⚠ WARNING	⚠ AVERTISSEMENT
ELECTRICAL VOLTAGE This system is powered by high voltage electricity. Like any other electrically powered device, if it is not used properly, it can cause electrical shock. Always plug the power cord into an electrical outlet with adequate fuse protection and proper grounding. In the event of a short circuit, grounding reduces the risk of shock by providing an escape wire for the electric current. Improper grounding of the unit can result in a risk of electric shock. Always unplug the unit before doing any service or repair to the unit.	**TENSION ELECTRIQUE** Ce système est alimenté par de l'électricité à haute tension. Comme tout autre appareil électrique, s'il n'est pas utilisé correctement, il peut provoquer un choc électrique. Branchez toujours le cordon d'alimentation dans une prise électrique avec une protection par fusible adéquate et une mise à la terre appropriée. En cas de court-circuit, la mise à la terre réduit le risque d'électrocution en fournissant un fil d'échappement pour le courant électrique. Une mauvaise mise à la terre de l'appareil peut entraîner un risque d'électrocution. Débranchez toujours l'appareil avant d'effectuer tout entretien ou réparation sur l'appareil.